VOLVO ARTICULATED HAULERS

A25F, A30F

24-28 t 320-362 hp

A PASSION FOR PERFORMANCE.

At Volvo Construction Equipment, we're not just coming along for the ride. Developing products and services that raise productivity – we are confident we can lower costs and increase profits for industry experts. Part of the Volvo Group, we are passionate about innovative solutions to help you work smarter – not harder.

Helping you to do more

Doing more with less is a trademark of Volvo Construction Equipment. High productivity has long been married to low energy consumption, ease of use and durability. When it comes to lowering life-cycle costs, Volvo is in a class of its own.

Designed to fit your needs

There is a lot riding on creating solutions that are suited to the particular needs of different industry applications. Innovation often involves high technology – but it doesn't always have to. Some of our best ideas have been simple, based on a clear and deep understanding of our customers' working lives.

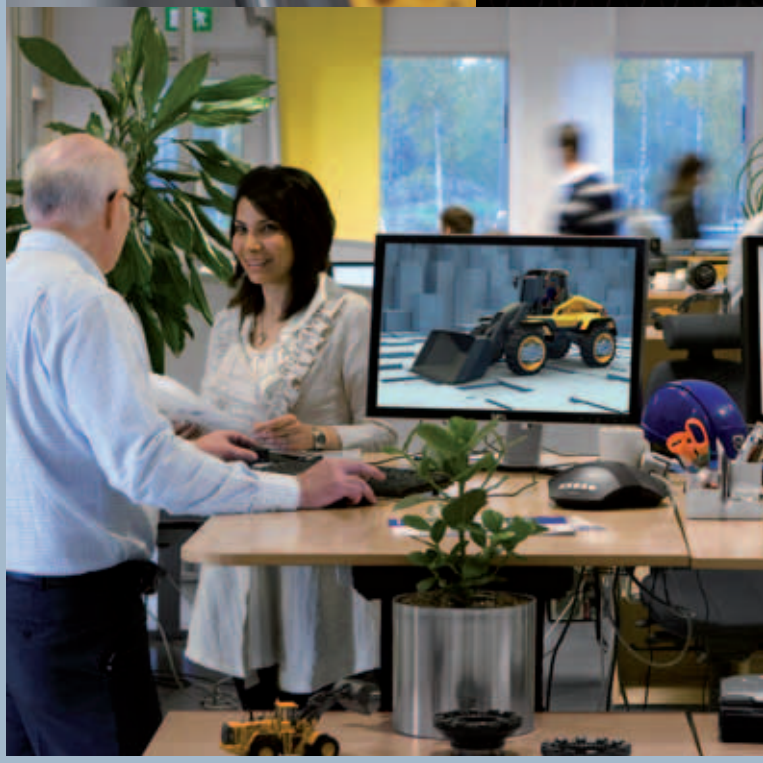

You learn a lot in 175 years

Over the years, Volvo has advanced solutions that have revolutionized the use of construction equipment. No other name speaks Safety louder than Volvo. Protecting operators, those around them and minimizing our environmental impact are traditional values that continue to shape our product design philosophy.

We're on your side

We back the Volvo brand with the best people. Volvo is truly a global enterprise, one that is on standby to support customers quickly and efficiently – wherever they are.

We have a passion for performance.

Volvo Trucks

Renault Trucks

Mack Trucks

UD Trucks

Volvo Buses

Volvo Construction Equipment

Volvo Penta

Volvo Aero

Volvo Financial Services

TAKE CONTROL OF YOUR PRODUCTIVITY.

Articulated Steering

Unique, self-compensating hydro-mechanical system provides precise steering throughout the machine's life, excellent maneuverability and a short turning radius. Powerful and accurate steering ensures highly productive, safe operation. Volvo steering system, giving the operator an outstanding control of the machine, is superior to all others on the market.

A typical work cycle for an articulated hauler includes loading, travel, maneuvering and dumping. The Volvo A25F and A30F machines perform these operations in the most efficient and safe way, excelling all others.

Volvo's Unique Steering System

The steering system design provides high steering force, even at low engine speeds for the toughest off-road operating conditions, e.g. deep mud. Hydraulic damping prevents the transmission of impacts and jolts to the steering wheel and operator. The system also ensures precise steering and directional stability at high-speed hauling on roads, so there is no need for the operator to compensate with the steering wheel.

Volvo's Unique Load & Dump Brake

The patented user-friendly Load & Dump Brake enhances productivity and safety, improving ease of operation and reducing operator fatigue. When in position for loading or dumping, the operator presses a single button which results in automatic application of the service brakes and shifting the transmission to neutral. Once completed, selecting a gear then deactivates the function, releasing the brakes.

Beneficial Body Design

A strategically located body hinge provides a long distance between the rear bogie axle and the chute's rear edge together with high dump clearance when the body is raised. Allowing placement of the load directly in the right position, it maximizes productivity while dumping over an edge, into a hopper or stockpiling. The high tipping angle and design of the body, made from high strength steel, promote efficient material ejection.

Powerful Hydraulics and Effective Dumping

The load sensing hydraulic system with variable displacement axial-piston pumps, powering the double acting single-stage hoist cylinders, allows easy rising of the fully loaded body even on very steep grades. Precise dumping control ensures short cycle times and safety in all applications.

SMOOTH AND STEADY. ALWAYS.

Off-road hauling performance is enhanced when every wheel is firmly on the ground. Stable and smooth, Volvo haulers keep you moving ahead in full control, even in the worst operating conditions.

Front Suspension

A25F and A30F feature gas-hydraulic front axle suspension - soft and progressive. The vibration, transmitted from the wheels to the cab is decreased, so the machine can be driven at higher speeds when operating off-road. It shortens cycle times and increases overall productivity. Featuring operator comfort, gas hydraulic suspension contributes to reduced fatigue and, therefore, to improved efficiency.

Rotating Hitch

The hitch allows independent movement of the tractor and the trailer without frame twist and provides the required oscillation for good ground contact in rough operating conditions. The high hitch position close to the load's center of gravity improves stability and ensures high ground clearance for unique off-road mobility and steady high-speed hauling.

Bogie Suspension

Unique, 100% maintenance free, 3-point bogie beam design allows the rear wheels to move independently, ensuring good ground contact, traction, vehicle stability and less strain on the frame. This, together with long suspension travel ensures superior off-road performance, keeping the body level and preventing material spillage, even when moving over large bumps and ruts. A smooth "floating" ride for high operator comfort reduces cycle times and improves productivity. Durable components provide more uptime and reduced operating costs.

Volvo Transmission

Purpose-built by Volvo and newly updated, the Powertronic planetary transmission with lockup function is designed to ensure fully automatic, accurate and smooth gear selection for reduced operater fatigue and increased productivity. The transmission has 6 forward and 2 reverse gears, which can be skipped while shifting for faster acceleration. An integrated transmission protection reduces the risk for operator error, improving safety.

Differential Locks

F-series Volvo articulated haulers are equipped with "dog clutch" type differential locks, featuring 100 % locking capability and a no-slip, no-wear design. When locked, all wheels rotate at the same speed, maximizing traction in severe operating conditions. The differential locks can be engaged or disengaged on the move for greater productivity and performance.

OPERATE IN COMFORT.

Volvo Care Cab

Good all-around visibility is essential for both high safety and productivity. Comfortable Volvo Care Cab with centrally positioned operator station, sloping hood, large rear-view mirrors, wide front windshield and a full-glass door feature excellent visibility. A new instrument panel, Contronics and tipping lever ensure ease of operation.

Spacious interior, large storage compartments, conveniently located pedals, controls and switches minimize operator fatigue throughout the whole shift. The well-designed cab is built from high strength steel, meeting ROPS/FOPS safety standards.

Volvo offers a world-class operator environment for low fatigue, high productivity and safety. Just enter the legendary Care Cab and look around. All instruments are in view, all controls are within reach – right where you want them. The steering wheel and seat can be easily adjusted for optimum comfort.

User-Friendly Operator Communication System

Contronics continuously provides valuable information on the machine's systems and operation, with early warning via easy to understand malfunction indicators, alerting abnormal machine or operator behavior, improving availability. A new large color monitor is visible at a glance and a new keypad, located on the right instrument panel, allow easier navigation between different screens and functions.

Climate Control System

The high-capacity heating and ventilation system provides excellent comfort, enhancing productivity. Efficient incoming air filtration ensures a clean operator environment even in dusty conditions. Strategically located air vents provide even temperature in the cab. Separate defroster vents keep all windows clear. Optional Electronic Climate Control (ECC) system automatically maintains the desired temperature.

Safe and Easy Cab Access

Designed for safe, easy entry and exit, the Care Cab features a wide door opening with no threshold, correctly positioned non-slip steps and new, convenient handrails.

Dumping Functionality

A25F and A30F feature new dumping functions, improving ease of operation, safety and productivity – detent body lowering and adjustable tipping angle. The angle can be easily set by the operator, using Contronics to limit the machine height, when operating under electrical wires, in tunnels or underground.

Noise Reduction

The Care Cab features very effective sound insulation and is mounted on optimally positioned rubber pads to reduce vibration. Comfortably low internal noise level (only 74 dB (A) – ISO 6396) reduces fatigue to help boost operator productivity.

LESS MAINTENANCE FOR MORE UPTIME.

Volvo articulated haulers help you get more out of each working day. They feature a low need for maintenance, long service intervals, excellent serviceability and availability. All this contributes to more uptime for productive hauling.

Brake and Retardation Systems

A25F and A30F are equipped with fully hydraulic dry disc brakes on all wheels. The design ensures high braking performance and durability. Additionally, both machines feature easy to operate retardation system, using the hydraulic retarder built-in the transmission and VEB (Volvo Engine Brake – compression brake plus exhaust retarder EPG).
Powerful retarders are used to control speed while hauling downhill, slowing down before curves or cross roads, reducing the need for service brakes use. It ensures low operating costs plus fast and safe hauling.

Service Friendly

Engine oil filters are grouped and easily accessed via the swing-down front grill. The special valve in the belly plate and a dedicated drainage hose, stored in the front grill, ensure oil change without spillage, reducing environmental impact. Remote-mounted drains are located for convenient reach. All service and grease points are easily accessed either from ground level via non-slip platforms. Daily and weekly maintenance is not required. Excellent serviceability and long service intervals reduce machine downtime.

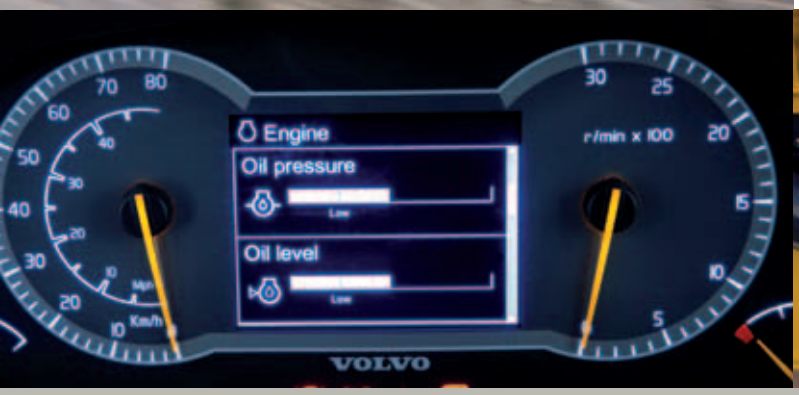

Automatic On-Board Monitoring

The Contronics system electronically monitors fluid levels, providing warnings for any deviations and scheduled service reminders, which minimizes downtime and increases machine availability.

Maintenance Free Rotating Hitch

All F-series haulers feature 100% maintenance free, completely sealed, durable hitch with permanently greased tapered roller bearings. No need for maintenance means reduced downtime and operating costs.

Easy Service Access

The front grill swings down, acting as a service platform with anti-slip steps. The hood tilts up to 90 degrees for full and safe access to the engine compartment. This makes reaching service points, changing filters, cleaning the cooling package much easier and less time consuming.

A QUICK LOOK AT THE BEST HAULER.

Heavy Duty Body
Durable body made from high strength HB400 steel. Body design, high dump clearance and tipping angle promote excellent material ejection.

CareTrack*
CareTrack is the Volvo telematics system. It is equipped as standard on this machine and is designed to provide information to help improve productivity and efficiency.

Powerful Hydraulics and Effective Dumping
Load-sensing "closed-centre" hydraulic system, with variable displacement pumps. Easy body raising, even on steep grades. Precise dumping control ensures short cycle times and safety. Detent body lowering and adjustable tipping angle improve productivity.

Durable Frames
Heavy-duty front and rear frames, with optimized load carrying design. Developed for severe off-road operations and long service life.

Differential Locks
No slip, no wear, "dog clutch" type differential locks provide 100% locking capability. "Dog clutch" longitudinal differential lock in drop box.

Maintenance-Free Rear Suspension
Straddle mounted bogie beams reduce the strain on the frame. 3-point axle mounting allows individual wheel movement and long suspension travel, keeping the body level, even when operating in very rough terrain.

Powerful Brakes and Retardation
Fully hydraulic brake system with dry discs on all wheels ensures high braking performance and durability. Easy to operate, powerful retardation system, using the hydraulic retarder built into the tranmission and VEB, provides low operating costs.

* In markets where CareTrack is available

Volvo Care Cab
Quiet, spacious, comfortable, with excellent visibility and ergonomically positioned controls for safe, productive operation. Meets ROPS / FOPS safety standards.

Unique Load & Dump Brake
Easy to operate: a single button press applies the service brakes and shifts the transmission to neutral, reducing operator fatigue, enhancing productivity and safety.

Efficient Cooling
Two hydraulically driven variable speeds cooling fans consume engine power only when needed, lowering fuel consumption and noise. Side-mounting simplifies service and maximizes uptime.

Easy Service Access
90 degree tilting hood and swing down front grill with integrated steps, acts as a service platform. All grease points and remote mounted drains are accessible from ground level or non-slip platforms. No daily or weekly greasing.

Gas-Hydraulic Front Suspension
Soft and progressive 3-point axle suspension shortens cycle time and increases productivity. Featuring operator comfort and reducing fatigue, it improves overall efficiency.

Articulated Steering
Unique, hydro-mechanical, self-compensating system. High steering force, accurate steering, directional stability for productive and safe operation.

Fuel Efficiency
Environmentally-friendly, electronically controlled, powerful diesel engine. High torque at low rpm, well matched drivetrain and ATC reduce fuel consumption.

Maintenance-Free Hitch
Rotating hitch with permanently greased tapered roller bearings eliminates frame twist, providing better off-road mobility. High placement ensures excellent ground clearance and stability.

EFFICIENT HAULING. DEFINED.

"F" Stands for Fuel Efficiency

F-series haulers provide market leading fuel efficiency. Reliable Volvo components, designed using over 40 years experience, competence and the latest industrial technologies are well matched in the drivetrain, specially developed for heavy duty applications. Functioning together, they ensure high rimpull, low power losses and a long service life. Main customer benefits – reduced operating costs and environmental impact.

Customer trust is not just given, but earned over years. Volvo developed the hauler concept in the 1960s and retains its position as the world's leading articulated hauler manufacturer. When choosing A25F or A30F, you can be sure – the job will be done quickly, cost effectively and safely, with low environmental impact.

Automatic Traction Control (ATC) System is Standard on All F-Series Volvo Articulated Haulers

Constantly changing underfoot conditions are quite common when operating an articulated hauler. To keep the traction and mobility, ATC system automatically selects the optimal drive combination on the move. The possibility to shift between 6x4 mode (lower fuel consumption, less tire wear) and 6x6 mode (maximum rimpull) is a Volvo exclusive.

Since operators do not have to engage/disengage differential locks manually, they can focus on proper operation, which improves safety and reduces operating costs. The ATC system not only simplifies operation, maximizing off-road performance, but also protects the drivetrain from misuse and unnecessary wear, prolonging machine service life.

Environmentally-Friendly Engine

A25F and A30F are equipped with electronically controlled, low emission diesel engines. Powerful engines are characterized by high torque at low rpm, resulting in excellent fuel efficiency, high performance, quick response, less wear and long life. Purpose built by Volvo, they optimally match the drivetrain, ensuring maximum utilization of power and torque even in the most demanding applications.

Effective Cooling

Two hydraulically driven variable speed fans consume engine power only when needed, perfectly responding to cooling demands. Most of the time, they rotate at idle speed, lowering fuel consumption and noise. The system ensures effective cooling, providing optimal temperatures in all conditions. Side-mounting simplifies service, maximizing uptime.

TOP PERFORMANCE DESERVES SUPPORT.

The day you receive your new Volvo Articulated Hauler is just the start of your working relationship with Volvo. From service and maintenance to our CareTrack telematics system – Volvo has a comprehensive and sophisticated aftermarket portfolio to continuously add value to your business.

Volvo designed and built your machines, so no-one knows how to keep them working in top condition more than us. When it comes to your machine, our Volvo trained technicians are the experts.

Our technicians work with industry leading diagnostic tools and techniques, using only Genuine Volvo Parts to deliver the highest levels of quality and service. Talk to your Volvo dealer about how genuine Volvo services can best provide the service and maintenance plan that is the right fit for you and your business.

State-of-the-art machines require state-of-the-art support and your Volvo dealer can provide a catalogue of services designed to get the most out of your machine, helping you maximise uptime, productivity and residual value. Your Volvo dealer can provide a number of sophisticated support offers, including:

Service plans ranging from routine wear inspections, through to comprehensive maintenance and repair agreements.

Analysis and diagnostics to help you understand how your machine is running, highlight potential maintenance issues and identify where performance can be improved.

Eco Operator training courses can help your operators work towards a safer, more productive and fuel efficient performance.

CareTrack*

Each Volvo Articulated Hauler comes standard equipped with CareTrack, the Volvo telematics system. CareTrack provides information for better planning and smarter working; including fuel consumption reports, location reports and service reminders. Save fuel. Reduce costs. Maximise profitability. You can with CareTrack.

* In markets where CareTrack is available

VOLVO A25F, A30F IN DETAIL.

Engine

Fuel efficient, environmentally friendly, powerful, 6-cylinder, V-ACT diesel engine with 4 valves per cylinder, variable geometry turbo (VGT) and external exhaust gas recirculation (EGR).
High pressure fuel injection system (2500 bar).
High torque at low rpm. Long service life.
Diesel particulate filter (DPF) with thermal regeneration.
Two-stage incoming air filtration is standard.
Cooling system: high capacity cooling system with easy accessible, power and fuel saving, variable speed hydraulically driven fans.

A25F	Volvo D11H-A / D11H-B (Tier 4i / Stage IIIB)	
Max power at	r/s	35
SAE J1995 Gross	kW	235
Flywheel power at	r/s	35
ISO 9249, SAE J1349 Net	kW	234
Max torque at	r/s	18,3
SAE J1995 Gross	Nm	2 040
ISO 9249, SAE J1349 Net	Nm	2 031
Displacement	l	10,8

A30F	Volvo D11H-A / D11H-B (Tier 4i / Stage IIIB)	
Max power at	r/s	33
SAE J1995 Gross	kW	266
Flywheel power at	r/s	33
ISO 9249, SAE J1349 Net	kW	265
Max torque at	r/s	20
SAE J1995 Gross	Nm	2 040
ISO 9249, SAE J1349 Net	Nm	2 032
Displacement	l	10,8

Drivetrain

Torque converter with built-in lock-up function.
Transmission: Volvo PowerTronic planetary fully automatic transmission with 6 forward gears and 2 reverse gears.
Built-in hydraulic variable retarder.
Dropbox: Volvo-developed, in-line design with high ground clearance and 100% longitudinal "dog clutch" type differential lock.
Axles: heavy duty, purpose built Volvo design with planetary type hub reductions and 100% "dog clutch" type differential locks.
Automatic traction control system (ATC).

A25F/A30F	
Torque converter	2,37:1
Transmission, Volvo	PT 2116
Dropbox, Volvo	IL1 ATC
Axles, Volvo	AH 56/64

Electrical System

Cables are enclosed in protective plastic conduits, secured to the frame.
All cables, sockets and pins are identified. Prewired for options.
Connectors meet IP67 standard for water-proofing.
Easy accessed battery disconnect switch.
Powerful halogen lights.

A25F/A30F	
Voltage	24 V (2x12 V)
Battery capacity	2x170 Ah
Alternator	2,26 kW (80 A)
Starter motor	9,0 kW

Brake System

Complies with ISO 3450.
Fully hydraulic brakes with dry discs on all wheels.
Two independent circuits: one for front axle and one for bogie axles.
Parking brake: spring-applied disc brake on the propeller shaft.
Retarders: hydraulic, built-in transmission and Volvo Engine Brake
Volvo Engine Brake: compression brake and exhaust retarder (EPG).

Steering System

Hydro-mechanical, self compensating design. Two double-acting steering cylinders.
Steering angle: 3,4 steering wheel turns lock-to-lock, ±45°.
Steering system, including secondary steering fulfills ISO 5010.

Chassis

Frames: box type, heavy duty. High strength steel, robot welded.
Rotating hitch: 100% maintenance free, fully sealed, with permanently greased tapered roller bearings.
Front suspension: Gas-hydraulic struts. Soft and progressive. Independent wheel movement via a 3-point mounting system.
Rear suspension: 100% maintenance free. Straddle mounted bogie beam. Independent wheel movement via a 3-point mounting system.

Cab

Mounted on rubber pads. Ergonimically designed. Easy entry and exit. Wide angle forward view. Operator centerally positioned above the front axle. Adjustable operators seat with retractable seat belt.
Tilt/telescopic steering wheel. Ergonomically positioned controls.
Filtered air. Optional climate control system.
Operator communication system: Contronics. Large color display, user-friendly and easy-to-understand information, all vital machine functions are constantly monitored.
Instructor seat with seat belt.
Safety: ROPS/FOPS standards approved according to ISO3471, SAE J1040 / ISO3449, SAE J231.
Sound level in cab according to ISO 6396: 74 dB(A).
External sound level* according to ISO 6395:

A25F	108 dB(A)
A30F	109 dB(A)

* with Noise Reduction Kit

Hydraulic System

Pumps: Four engine-driven variable displacement piston pumps driven by the flywheel PTO. One ground-dependent piston pump mounted on the dropbox for emergency steering.
Two return oil filters with magnetic cores provide effective oil filtration.
System max working pressure is 25 MPa.

Dumping System

Patented Load and Dump Brake.
Dumping Cylinders: two single stage double acting.

A25F/A30F	
Tipping angle	74°/70°
Tipping time with load	12 s
Lowering time	10 s

Body

Plate thickness:	
Front	8 mm
Sides	12 mm
Bottom	14 mm
Chute	14 mm
Material: HB400 steel	
Yield strength	1000 N/mm^2
Tensile strength	1250 N/mm^2

Load Capacity

	A25F	A30F
Standard Body		
Load capacity	24 000 kg	28 000 kg
Body, struck	11,7 m^3	13,6 m^3
Body, heaped 2:1	15,0 m^3	17,5 m^3
With overhung tailgate		
Body, struck	12,1 m^3	14,0 m^3
Body, heaped 2:1	15,6 m^3	18,1 m^3

SPECIFICATIONS.

Fill capacities		
	A25F	**A30F**
Crankcase	38,0 litre	38,0 litre
Fuel tank	400,0 litre	400,0 litre
Cooling system	95,0 litre	95,0 litre
Transmission, total	48,0 litre	48,0 litre
Dropbox	9,2 litre	9,2 litre
Axles, front/bogie	32,0/68,0 litre	38,0/78,0 litre
Hydraulic tank	175,0 litre	175,0 litre

Speed		
	A25F	**A30F**
Forward		
1	8 km/h	8 km/h
2	12 km/h	12 km/h
3	21 km/h	21 km/h
4	30 km/h	30 km/h
5	38 km/h	38 km/h
6	53 km/h	53 km/h
Reverse		
1	8 km/h	8 km/h
2	13 km/h	13 km/h

Operating weight unloaded		
	A25F	**A30F**
Tires	**23,5R25***	**750/65R25****
Front	12 550 kg	12 850 kg
Rear	9 350 kg	10 350 kg
Total	21 900 kg	23 200 kg
Payload	24 000 kg	28 000 kg

Total weight		
	A25F	**A30F**
Tires	**23,5R25***	**750/65R25****
Front	14 550 kg	15 350 kg
Rear	31 350 kg	35 850 kg
Total	45 900 kg	51 200 kg

Operating weight includes all fluids and operator
*) A25F with tires 750/65R25, add 200 kg/axle **) A30F with tires 23,5R25, decrease 200 kg/axle

Ground Pressure				
	A25F		**A30F**	
Tires	**23,5R25**	**750/65R25**	**750/65R25**	**23,5R25**
Unloaded				
Front	128 kPa	108 kPa	109 kPa	129 kPa
Rear	48 kPa	41 kPa	44 kPa	51 kPa
Loaded				
Front	148 kPa	125 kPa	130 kPa	154 kPa
Rear	160 kPa	134 kPa	152 kPa	181 kPa

	A25F	A30F
Pos	mm	
A	10 218	10 296
A_1	4 954	4 954
A_2	5 736	5 811
B	5 153	5 342
C	3 434	3 434
C_1	3 318	3 318
C_2	1 772	1 772
D	2 763	2 762
D_1	2 606	2 607
E	1 209	1 209
F	4 175	4 175
G	1 670	1 670
H	1 610	1 688
I	609	608
J	2 760	2 834
K	2 103	2 181
L	677	686
M	6 529	6 560
N	8 091	8 092
N_1	4 065	4 023
O	2 700	2 900
O**	2 900	3 099
P	2 490	2 690
Q	2 298	2 472
R	513	514
R_1	629	630
S	2 110	2 293
T	3 083	3 158
U	3 249	3 301
V	2 258	2 216
V*	2 216	2 258
W	2 859	2 941
W*	2 941	2 859
X	458	456
X_1	586	585
X_2	659	659
Y	2 258	2 216
Y*	2 216	2 258
Z	2 859	2 941
Z*	2 941	2 859
a_1	23.5°	23.2°
a_2	74°	70°
a_3	45°	45°

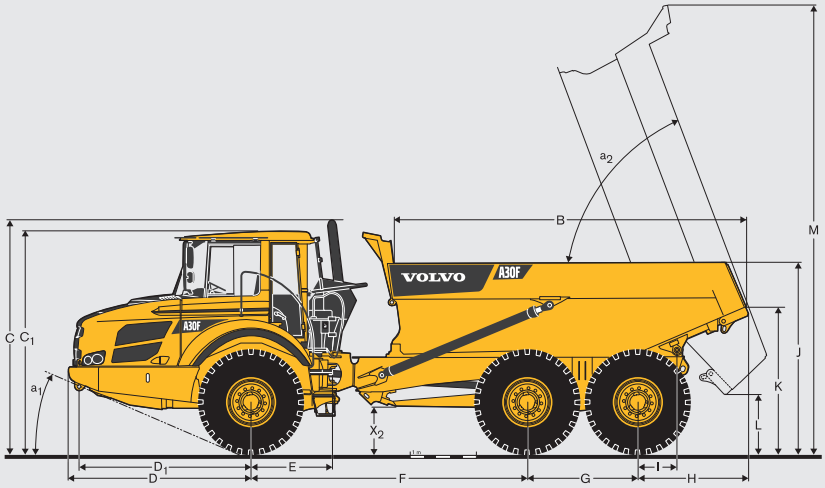

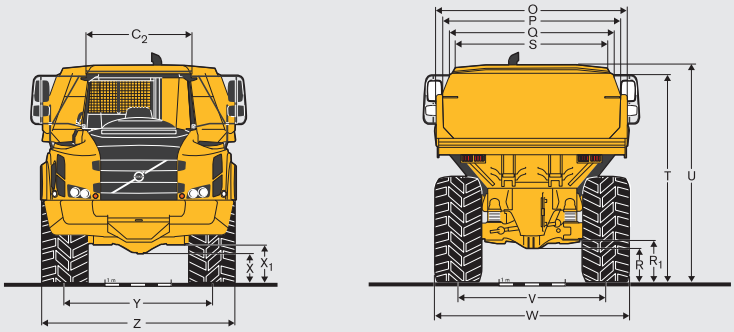

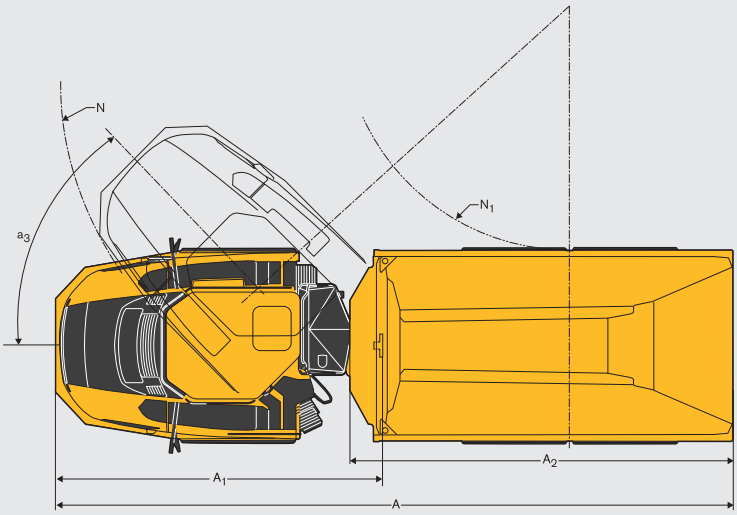

A25F: Unloaded machine with 23,5 R25
A30F: Unloaded machine with 750/65R25
*) A25F with optional 750/65R25 tires;
A30F with optional 23,5 R25 tires.
**) with overhung tailgate.

EQUIPMENT.

STANDARD EQUIPMENT

	A25F	A30F
Safety		
Anti-slip steps and platforms	•	•
Dump body lock	•	•
Handrails on steps and platforms	•	•
Hazard lights	•	•
Horn	•	•
Protective grill for cab rear window	•	•
Rear-view mirrors	•	•
Retractable 3-inch safety belt	•	•
ROPS/ FOPS protected Care Cab	•	•
Secondary steering	•	•
Steering joint lock	•	•
Windshield washers	•	•
Windshield wipers with interval function	•	•
Drivetrain		
6x4 and 6x6 automatically engaged drive modes	•	•
"Dog clutch" type 100% diff-locks in all axles	•	•
Full automatic transmission	•	•
Hydraulic variable retarder	•	•
Single stage dropbox with longitudinal diff-lock	•	•
Torque converter with automatic lock-up	•	•
Engine		
Direct injected, electronically controlled, turbocharged, intercooled	•	•
Grouped oil filters, for ease of change	•	•
Preheater for easier cold starts	•	•
Remote oil drain valve and hose for easy access	•	•
VEB (exhaust retarder EPG + compression brake)	•	•
Electrical system		
80 A alternator	•	•
Battery disconnect switch	•	•
Extra 24 V socket for lunch cooler	•	•
Lights:		
• Back-up light	•	•
• Brake lights	•	•
• Cab lighting	•	•
• Direction indicators	•	•
• Headlights	•	•
• Instrument lighting	•	•
• Parking lights	•	•
• Rear lights	•	•
Brake system		
Load & Dump Brake	•	•
Parking brake on propeller shaft	•	•
Two circuit, fully hydraulic, dry discs on all axles	•	•

	A25F	A30F
Comfort		
Ashtray	•	•
Cab heater with filtered fresh air and defroster	•	•
Can holder /storage tray	•	•
Cigarette lighter	•	•
Instructor seat with seat belt	•	•
Overhead console for radio	•	•
Sliding window	•	•
Space for lunch cooler	•	•
Storage box	•	•
Sun visor	•	•
Tilt/telescopic steering wheel	•	•
Tinted glass	•	•
Operator information interface		
Gauges:		
• Brake pressure	•	•
• Fuel	•	•
• Hydraulic retarder oil temperature	•	•
• Speedometer	•	•
• Tachometer	•	•
Warning lights grouped and easy to read		
Central warning (3 levels) for all vital functions	•	•
Central positioned information display:		
• Automatic pre-start checks	•	•
• Clock	•	•
• Hour meter	•	•
• Operational information, easy-to-navigate menu	•	•
• Troubleshooting diagnostics	•	•
Body		
Body prepared for exhaust heating and optional equipment	•	•
Exterior		
Front mudguard wideners and rear mudflups	•	•
Tires		
23.5R25	•	
750/65R25		•
Service and maintenance		
CareTrack telematics system	•	•
Drainage hose stored in the front grill	•	•
Machine Tracking Information System MATRIS	•	•
Service platform integrated in the front grill	•	•
Tool box	•	•

OPTIONAL EQUIPMENT

	A25F	A30F
Safety		
Fire-extinguisher and first aid kit	•	•
Warning triangle	•	•
Engine		
Air pre-cleaner, cyclone type	•	•
Air pre-cleaner, heavy-duty, dry type EON	•	•
Air pre-cleaner, oil bath type	•	•
Diesel engine heater, Eberspächer	•	•
Electric engine heater (120V or 240V)	•	•
Engine automatic shutdown	•	•
Engine shutdown timer	•	•
External emergency engine stop	•	•
High engine idle speed	•	•
Electrical system		
Anti-theft system (prevents engine start)	•	•
Rear vision system, colour LCD monitor in the cab	•	•
Reverse alarm	•	•
Rotating warning beacon, collapsible mount	•	•
Working lights, front-facing, roof mounted	•	•
Working lights, rear-facing, fender-mounted	•	•
Cab		
Air suspended, heated, fully adjustable seat	•	•
Armrest for operator seat	•	•
Cable kit for cab heater (120V or 240V)	•	•
Electrically heated and adjustable rear view mirrors	•	•
Electronic Climate Control (ECC)	•	•
Head restraint for operator seat	•	•
HEPA cab air filter	•	•
Radio installation kit, including loudspeakers	•	•
Radio with CD player	•	•
Body		
Exhaust heating	•	•
Extra front spillguard, bolt-on	•	•
Light material extension, bolt-on kit	•	•
Overhung tailgate, wire or linkage operated	•	•
Side extensions 200 mm (8"), welded	•	•
Underhung tailgate, linkage operated	•	•
Wear plates for heavy duty applications	•	•
Tires		
750/65R25	•	
23.5R25		•
Service and maintenance		
Automatic lubrication system	•	•
Electrical hood opening	•	•
Tool kit with tire inflation unit	•	•
Other		
Arctic kit	•	•
Brake guards	•	•
Lifting tools, wheel mounted	•	•
Synthetic hydraulic oil (biologically degradable)	•	•
Towing hitch	•	•

SELECTION OF VOLVO OPTIONAL EQUIPMENT

Underhung tailgate, linkage operated

Exhaust body heating

Low profile tires

Rear vision system, colour LCD monitor

Front facing working lights, roof mounted

External emergency engine stop

VOLVO CONSTRUCTION EQUIPMENT

Volvo Construction Equipment is different. Our machines are designed, built and supported in a different way. That difference comes from an engineering heritage of over 175 years. A heritage of thinking first about the people who actually use the machines. About how to help them be safer, more comfortable, more productive. About the environment we all share. The result of that thinking is a growing range of machines and a global support network dedicated to helping you do more. People around the world are proud to use Volvo. And we're proud of what makes Volvo different.

Not all products are available in all markets. Under our policy of continuous improvement, we reserve the right to change specifications and design without prior notice. The illustrations do not necessarily show the standard version of the machine.

VOLVO

Volvo Construction Equipment
www.volvoce.com

PUB 21A1006560 English (Global)
2011.03 ART
Volvo, Global Marketing